4-Channel RC Servo Multiplexer
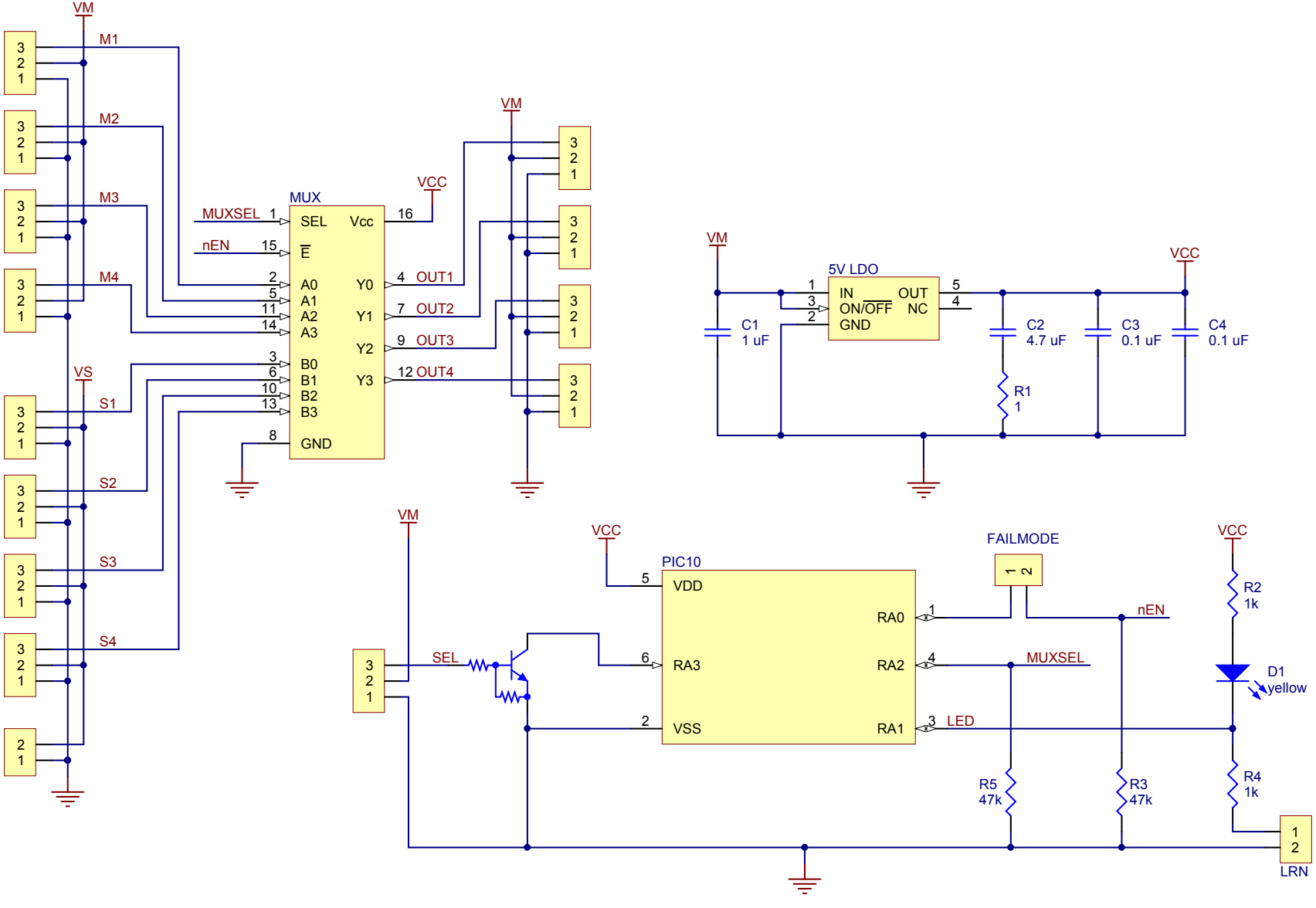
©2013 Pololu Corporation
www.pololu.com